

PRF0194415

Element

Do not be deceived by appearances: the minimalist lines of this hood are a masterpiece of simplicity and functionality. Invisible perimeter extraction system, Wi-Fi connectivity, whisper-quiet even at the highest power setting. And so much more.

Design by **Design Fabrizio Crisà**

Generic Data

WEIGHT (KG)

22.5

FINISHING

Black Matte + Black Glass

DIMENSIONS (CM)

90

ENERGY CLASS

A+

MINIMUM DISTANCE FROM WALL UNIT INDUCTION/RADIANT HOB

50cm

MINIMUM DISTANCE FROM WALL UNIT GAS HOB

65cm

DUCT TRANSITION

150mm

LIGHTING

Strip Led 1x7 W - 3500 K - 365 LUX

ABSORPTION

177W

Extraction

AIRFLOW MIN-MAX

185m^3/h - 620m^3/h

NOISE LEVEL MIN-MAX

42db(A) - 58db(A)

CONTROLS

3S+B Capacitive touch control

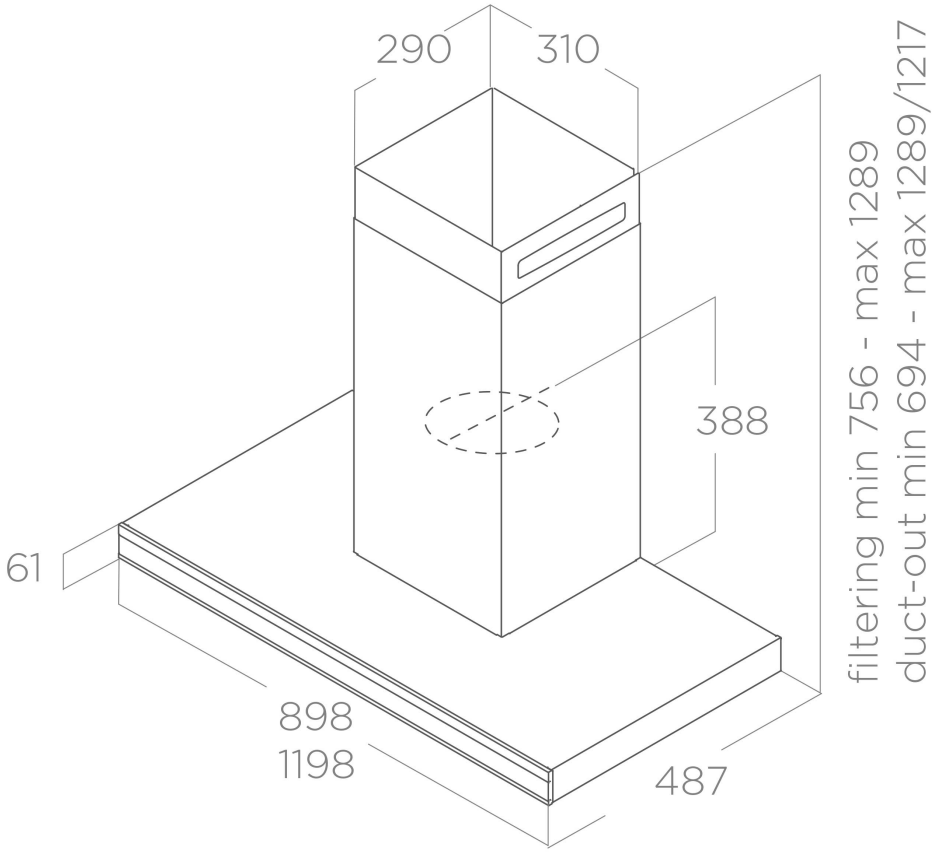
290
310
388
61
898
1198
487
filtering min 756 - max 1289
duct-out min 694 - max 1289/1217

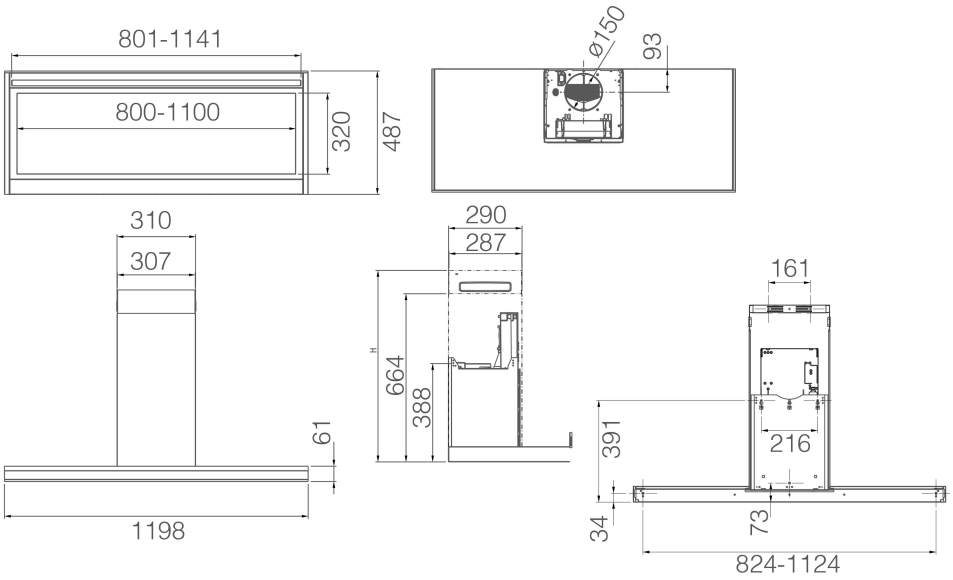
801-1141
800-1100
320
487
ø150
93
310
307
61
1198
290
287
664
388
161
391
216
34
73
824-1124