

PRF0214976

TheKub Wall

The compact design hood for wall installation, with high performance, smart connectivity and a width of just 32 cm.

Design by **0**

Generic Data

FINISHING

Black Matte

DIMENSIONS (CM)

3

ENERGY CLASS

A+

MINIMUM DISTANCE FROM WALL UNIT INDUCTION/RADIANT HOB

50cm

MINIMUM DISTANCE FROM WALL UNIT GAS HOB

65cm

DUCT TRANSITION

150mm

LIGHTING

Led 7 W - 3000 K - 450 LUX

ABSORPTION

177W

Extraction

AIRFLOW MIN-MAX

195m^3/h - 710m^3/h

NOISE LEVEL MIN-MAX

41db(A) - 59db(A)

CONTROLS

3S+B Electronic push button

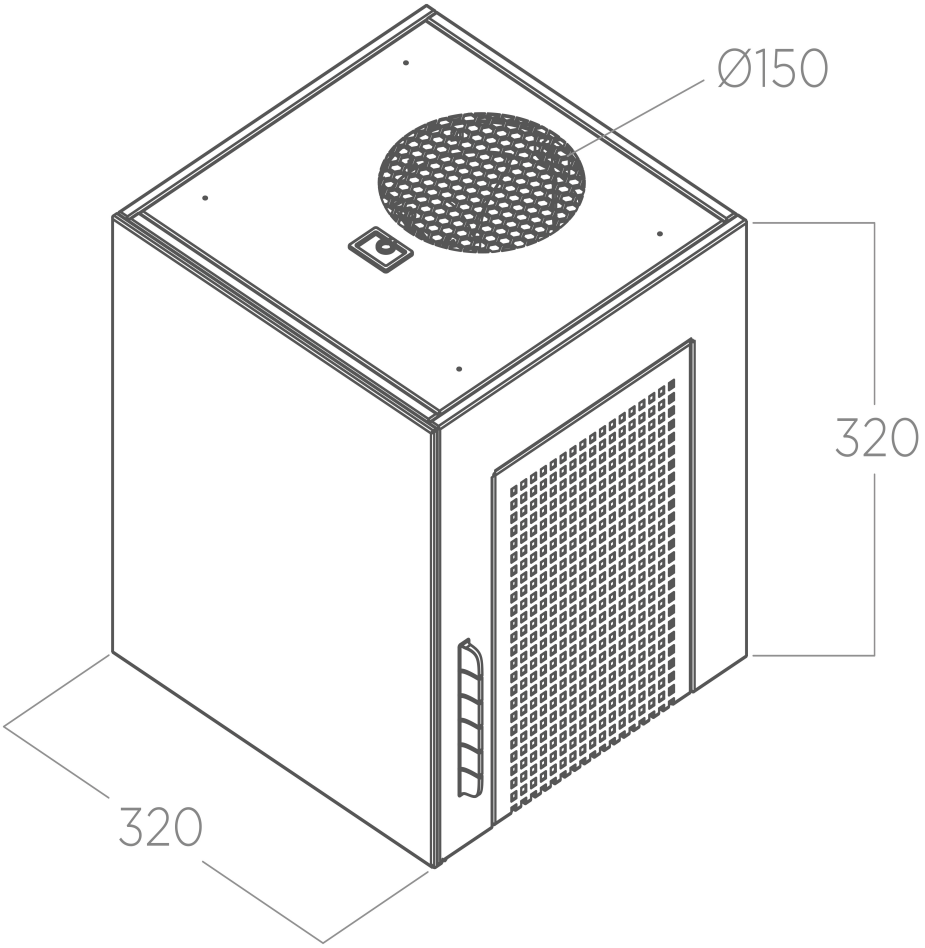
Ø150
320
320

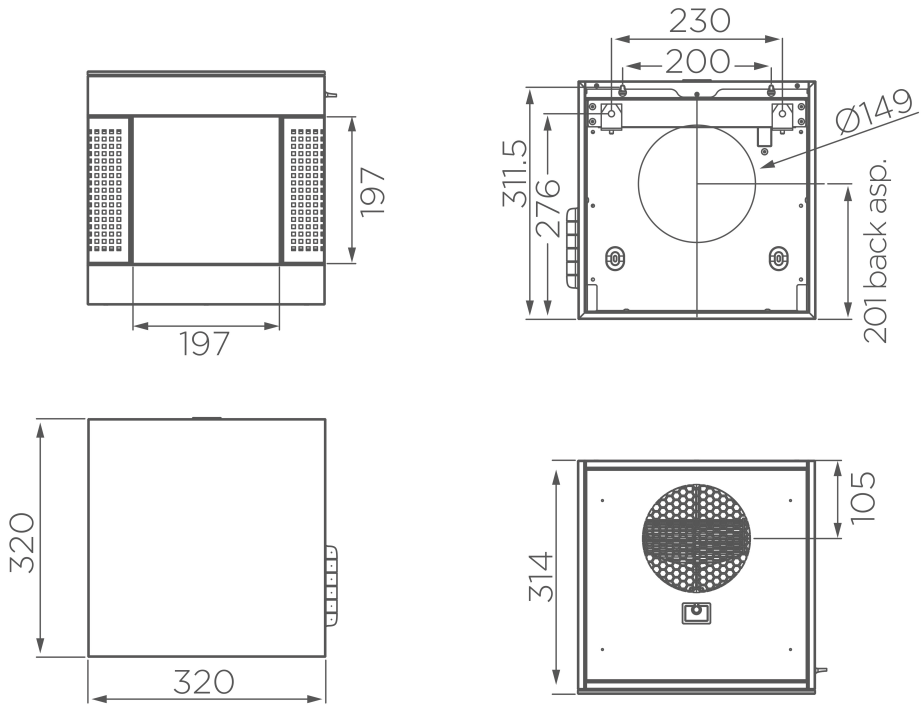
230
200
Ø149
311.5
276
201 back asp.
197
197
320
320
105
314